omb
TARGETED TO PROFESSIONALS

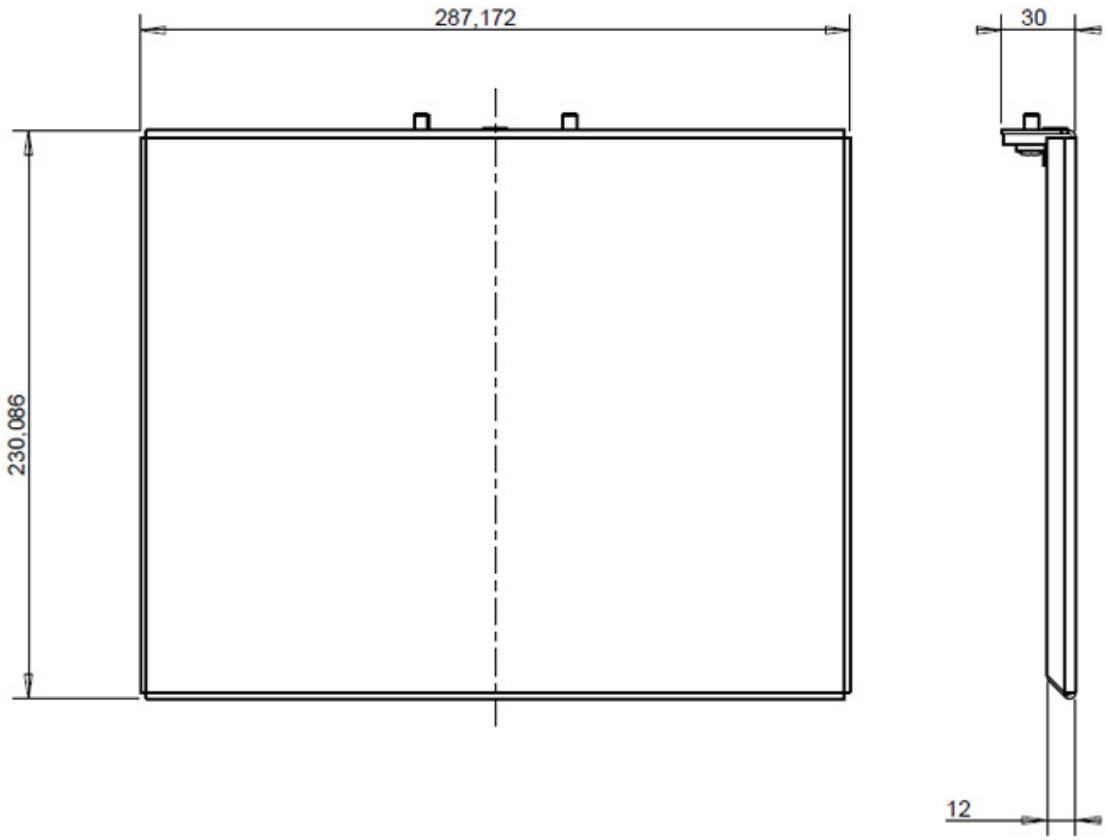

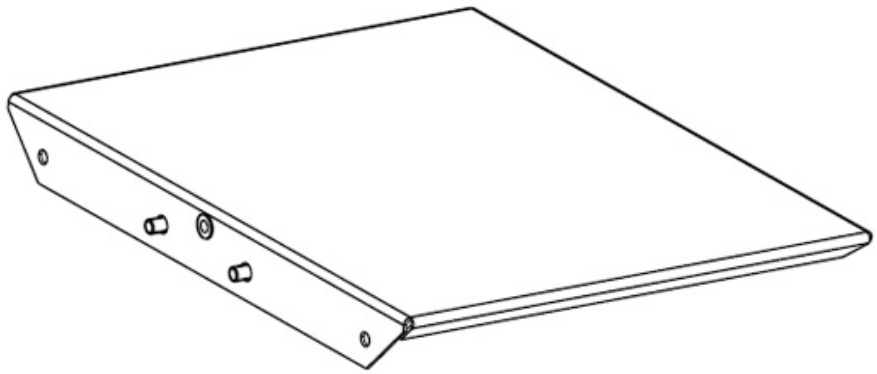

Big Trolley Shelf Plate

COD: 07077

Supporting shelf with 3 Kg weight capacity

Features

COLOR	BLACK

Additional information

- Colour RAL: **Black RAL9005**
- Shelf: **3 kg - 6,6lbs**

Logistics information

- Warranty: **5 years**
- Total Gross Weight: **2 kg**
- Total Net Weight: **1,5 kg**
- Box Dimension (mm): **400x300x(H)50**
- Q.ty for carton / EAN carton: **1 Units**