omb
TARGETED TO PROFESSIONALS

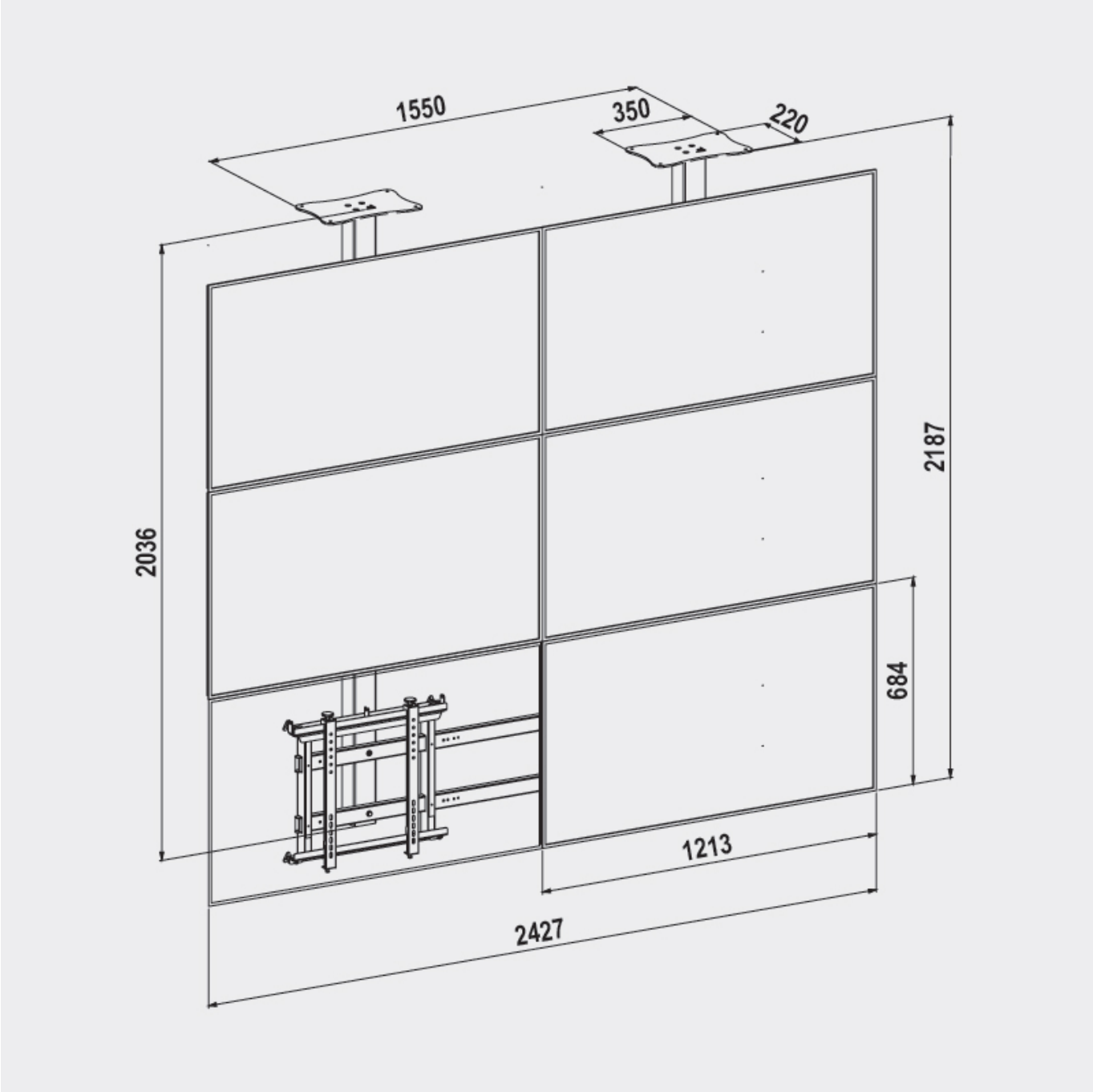

Cealyall-H 3×2 Single Side

COD: 08027

MIN VESA 150x150 - MAX VESA 400x400

CEALYALL-H 3×2 is a ceiling-mounted steel support for digital signage, designed for 46", 47", 49", 50", and 55" displays. A Back to Back version is available upon request for double-sided installations.

Features

DISPLAY TYPE	VIDEOWALL
POSITION	CEILING
VESA	150x150, 200x200, 200x300, 200x100, 300x300, 300x200, 400x200, 400x400, 400x300
MAXIMUM CAPACITY	40 Kg - 88 LBS
VIDEO SIZE	46", 47", 49", 50", 55"
COLOR	BLACK

Additional information

- Screen Position (L: Landscape | P: Portrait): **L**
- Colour RAL: **Black RAL9005**
- Distance from ceiling to screen baseline (with 55" screen): **2187 mm**
- DISTANCE FROM CEILING TO SCREEN TOP LINE (with screen 55"): **135 mm**
- Hidden cables
- Easy hanging system
- Single side

Logistics information

- Warranty: **5 years**
- Total Gross Weight: **55 kg**
- Total Net Weight: **53,5 kg**
- Box Dimension (mm): **2 box - 1800x800x300 + 2 box - 3000xdim110**
- Q.ty for carton / EAN carton: **1 Units**