omb
TARGETED TO PROFESSIONALS

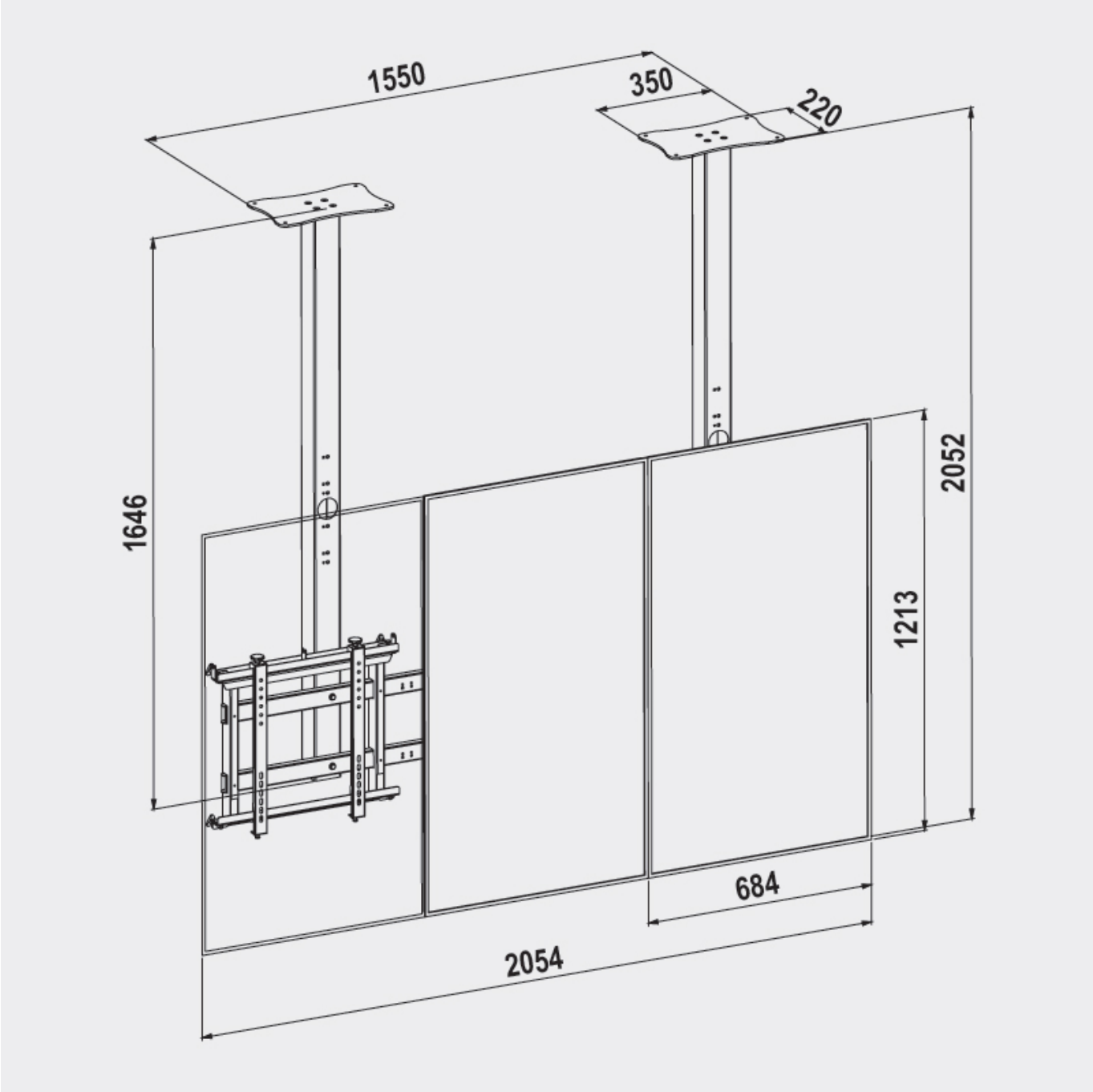


# Cealyall-V 1×3 Single Side

COD: 08035

MIN VESA 150x150 - MAX VESA 400x400

CEALYALL-V 1×3 is a ceiling-mounted steel support for digital signage, designed for 46", 47", 49", 50", and 55" displays. A Back to Back version is available upon request for double-sided installations.

### Features

| | |
|---|---|
| **DISPLAY TYPE** | VIDEOWALL |
| **POSITION** | CEILING |
| **VESA** | 150x150, 200x200, 200x300, 200x100, 300x300, 300x200, 400x200, 400x400, 400x300 |
| **MAXIMUM CAPACITY** | 40 Kg - 88 LBS |
| **VIDEO SIZE** | 46", 47", 49", 50", 55" |
| **COLOR** | BLACK |

### Additional information

- Screen Position (L: Landscape | P: Portrait): **P**
- Colour RAL: **Black RAL9005**
- Distance from ceiling to screen baseline (with 55" screen): **2052 mm**
- DISTANCE FROM CEILING TO SCREEN TOP LINE (with screen 55"): **839 mm**
- Hidden cables
- Easy hanging system
- Single side

### Logistics information

- Warranty: **5 years**
- Total Gross Weight: **36 kg**
- Total Net Weight: **34,5 kg**
- Box Dimension (mm): **1800x800x(H)300**
- Q.ty for carton / EAN carton: **1 Units**