omb
TARGETED TO PROFESSIONALS

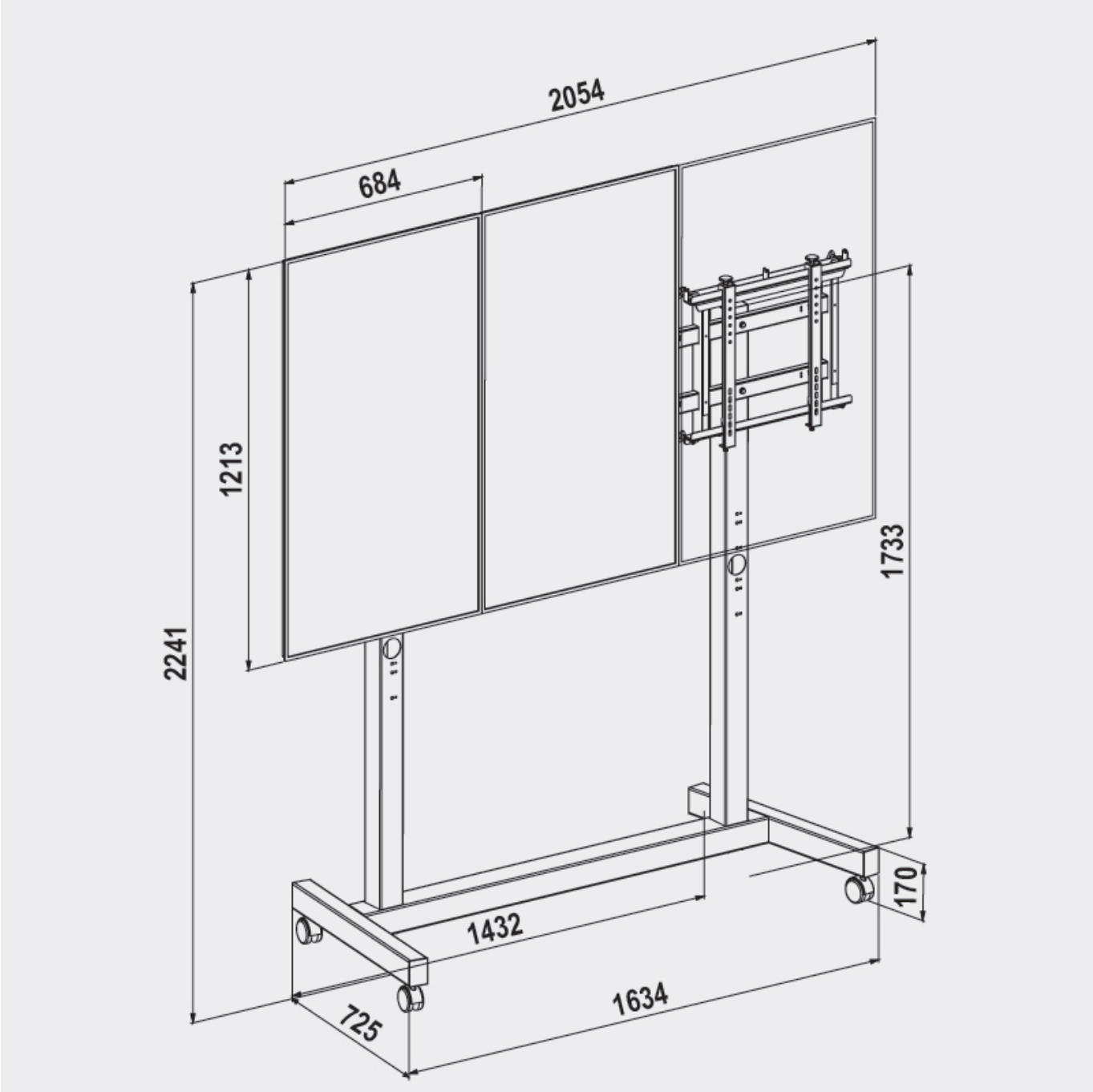

Movyall-V 1×3 Single Side

COD: 08029

MIN VESA 150x150 - MAX VESA 400x400

MOVYALL-V 1×3 Single Side is a steel floor-mounted support designed to create solid and stable video wall solutions for 46", 47", 49", 50", and 55" displays.

Features

DISPLAY TYPE	VIDEOWALL
POSITION	FLOOR
VESA	150x150, 200x200, 200x300, 200x100, 300x300, 300x200, 400x200, 400x400, 400x300
MAXIMUM CAPACITY	40 Kg - 88 LBS
VIDEO SIZE	46", 47", 49", 50", 55"
COLOR	BLACK

Additional information

- Screen Position (L: Landscape | P: Portrait): **P**
- Colour RAL: **Black RAL9005**
- Distance from floor to screen baseline (with 55" screen): **1098 mm**
- Distance from floor to top line of screen (with 55" screen): **2.311 mm**
- Hidden cables
- Easy hanging system
- With wheels
- Single side

Logistics information

- Warranty: **5 years**
- Total Gross Weight: **45 kg**
- Total Net Weight: **43,5 kg**
- Box Dimension (mm): **1800x800x(H)300**
- Q.ty for carton / EAN carton: **1 Units**