omb
TARGETED TO PROFESSIONALS

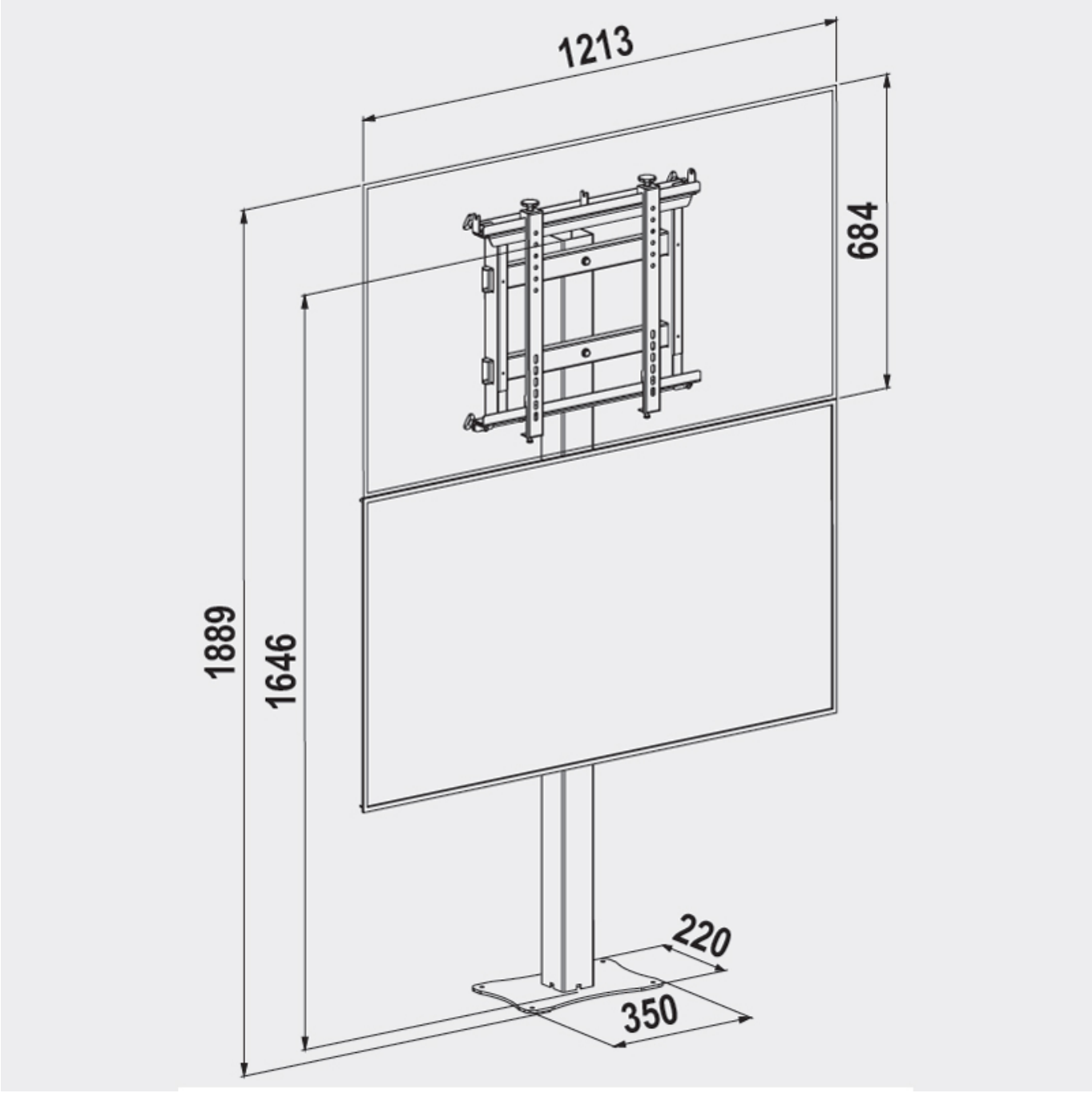

Standyall-H 2x1 Single Side

COD: 08014

MIN VESA 150x150 - MAX VESA 400x400

STANDYALL-H 2×1 Single Side is a floor-mounted steel stand designed to create solid and stable video wall solutions for 46", 47", 49", 50", and 55" displays.

Back-to-Back version: code 08020.

Features

DISPLAY TYPE	VIDEOWALL
POSITION	FLOOR
VESA	150x150, 200x200, 200x300, 200x100, 300x300, 300x200, 400x200, 400x400, 400x300
MAXIMUM CAPACITY	40 Kg - 88 LBS
VIDEO SIZE	46", 47", 49", 50", 55"
COLOR	BLACK

Additional information

- Screen Position (L: Landscape | P: Portrait): **L**
- Colour RAL: **Black RAL9005**
- Distance from floor to screen baseline (with 55" screen): **521 mm**
- Distance from floor to top line of screen (with 55" screen): **1889 mm**
- Hidden cables
- Easy hanging system
- Single side

Logistics information

- Warranty: **5 years**
- Total Gross Weight: **31 kg**
- Total Net Weight: **29 kg**
- Box Dimension (mm): **1800x800x(H)300**
- Q.ty for carton / EAN carton: **1 Units**