Rev.	Date of issue	Description	Sign
0001	17/04/2026	First edition	T.M.

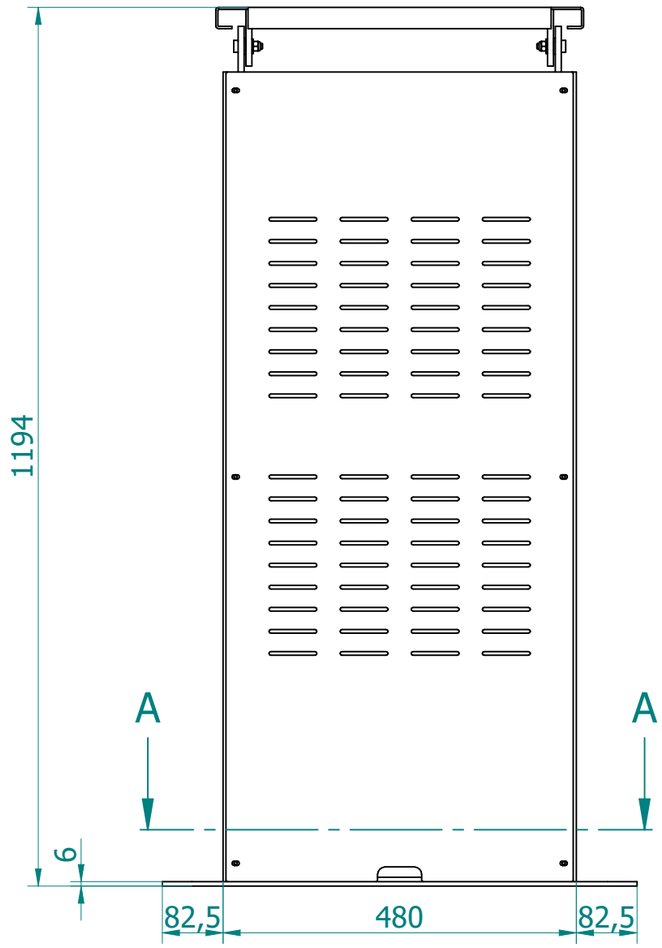

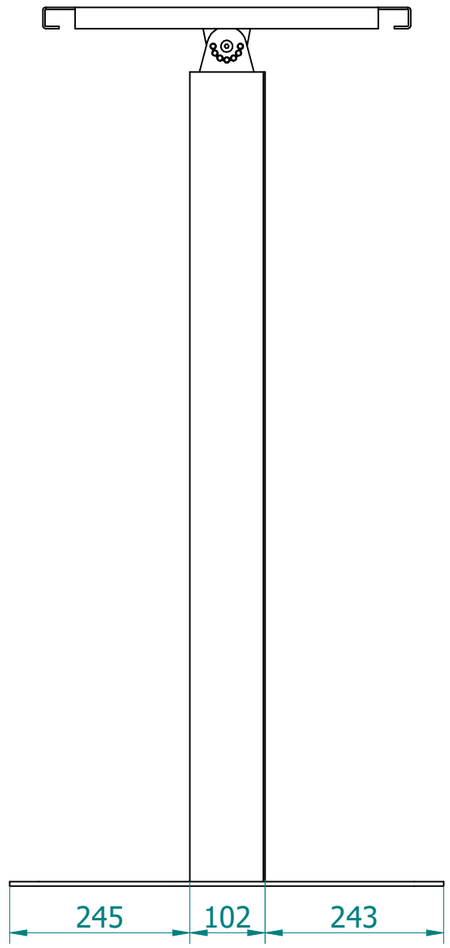

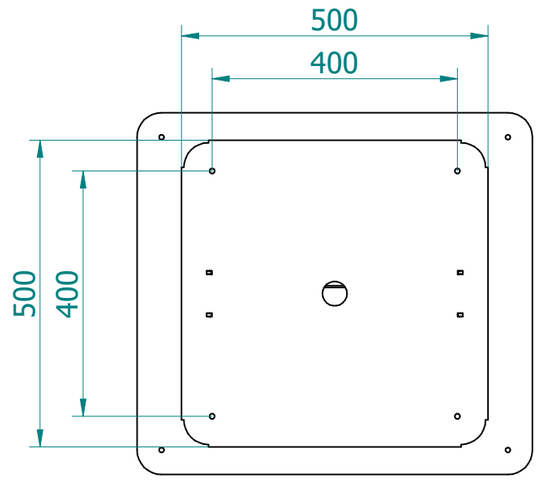

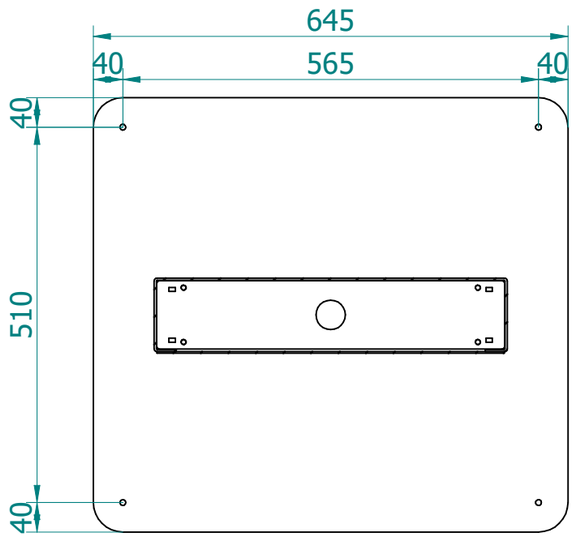

SEZIONE A-A

Weight 58 Kg.

Chamfers not indicated	Roughness	General tolerances	Weight [kg]	Scale
0,5x45°		For linear dimensions: ±0,1 mm For angular dimensions: ISO 2768-m		/:/

omb TARGETED TO PROFESSIONALS

Created by Trabucco Marco		Date of issue 17/04/2026
Title/Supplementary title Totem Leggio		
Code name/File name Totem Leggio	Paper size A3	Sheet 1\1