SOUND BAR
Col. ● Code 06168

WALL

20KG
44LBR

UNIVERSAL ADAPTOR
Col. ● Code 36088
MINI VESA 200X100 - MAX VESA 400X400

WALL

30KG
66LBR

Sound Bar

Supporto per sorreggere la barra soundbar e farla diventare parte integrante del televisore. La particolare sagoma permette di poter fissare la barra ai vari fori VESA del tv.

A bracket which allows the sound-bar to become an integral part of the television. Thanks to its particular shape it can be fixed to more VESA holes in the tv.

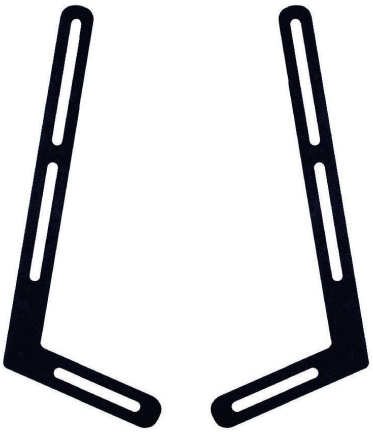

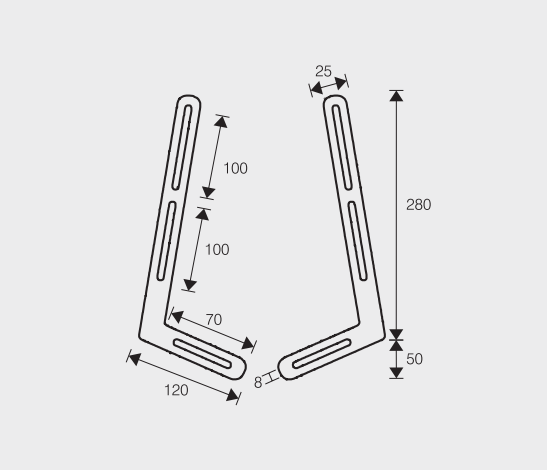

Universal Adaptor

Adattatore per convertire VESA 100 fino a VESA 400 x 400. Adatto anche per televisori led.
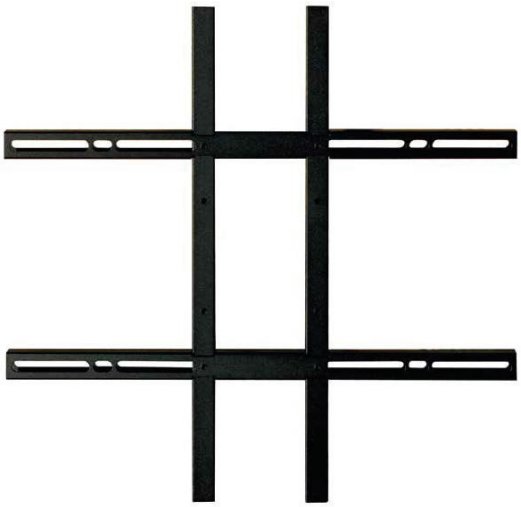
Adaptor for converting VESA 100 up to VESA 400 x 400. Also suitable for led tvs.